CERALOOK

Ideal Standard

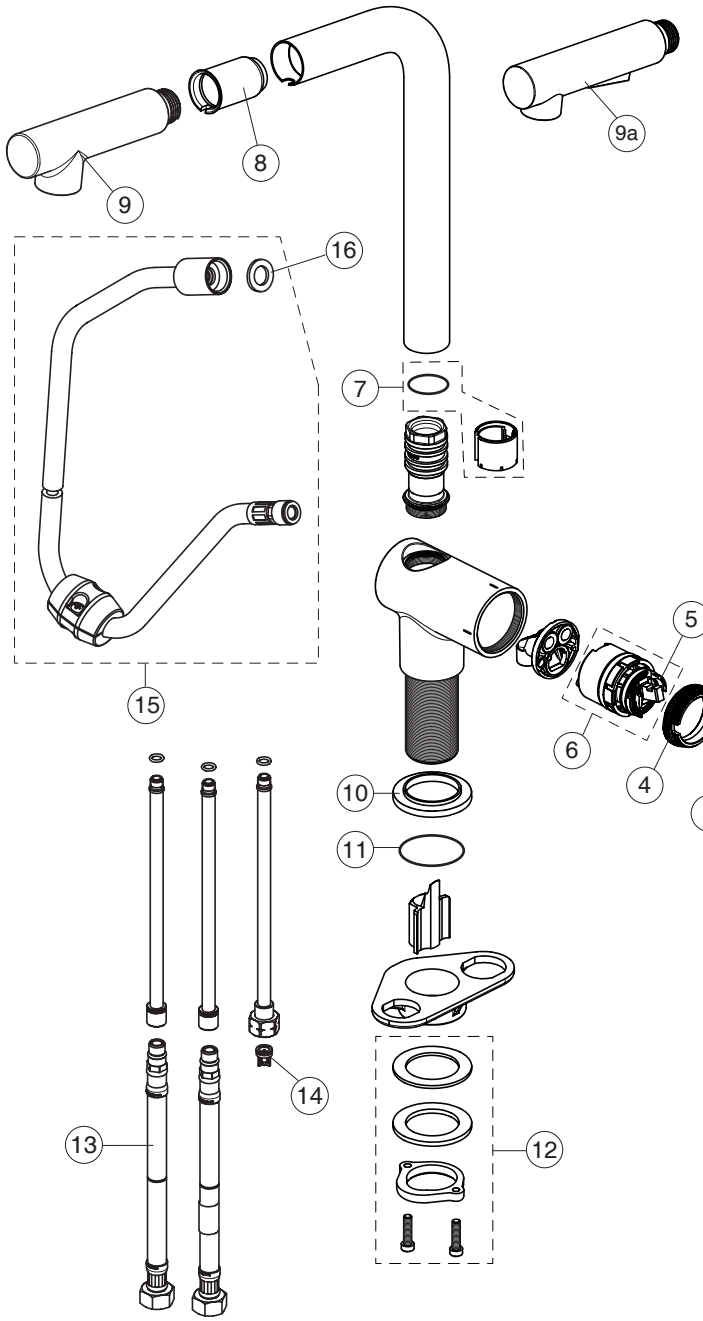

BC178XX

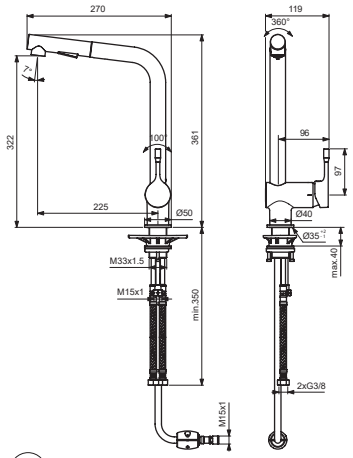

BC176AA

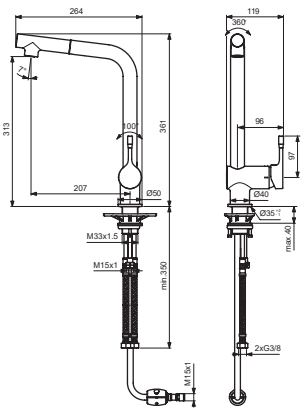

For XX=Coverage-Designate:
AA=chrome,GN=silver storm

For Instance:
B961580AA for chrome

Pos.	Signify	Spare parts-Nr.	Quantity	Pos.	Signify	Spare parts-Nr.	Quantity
1	Lever,w/logo-set	B961580XX	1 Set	15	Plastic hose L1500	B960460NU	1 Pcs.
2	Cap decorative	B960473XX	1 Pcs.	16	Rubber washer	A961817NU	1 Pcs.
3	Rosette	B961438XX	1 Pcs.				
4	Screw M41x1.5/M38x1.5	B961374NU	1 Pcs.				
5	Hot limit stop	A861181NU	1 Pcs.				
6	Cartridge Ø38mm	A861156NU*	1 Set				
7	Sealing set for tub.spout	B961582NU	1 Set				
8	Plastic insert	A960911NU	1 Pcs.				
9	Pull out spray 1F	B961588XX	1 Pcs.				
9a	Pull out spray 2F	B961581NU	1 Pcs.				
10	Rosette decorative	B960712XX	1 Pcs.				
11	O-Ring 37,77 X 2,62	A962574NU	1 Pcs.				
12	Connecting group	B960255NU	1 Set				
13	Fl.hose G3/8,M10x1/L445	A963600NU	1 Pcs.				
14	Rv-patrone	A960944NU	2 Pcs.				

**Universal set (not all parts needed)*